AFOSR-TR-78-0629

Approved for public release;
distribution unlimited.

APR 4 REC'D B

DDC
RECEIVED
APR 20 1978
B

AD A052934

DDC FILE COPY

Techniques for Studying Initial Film Formation on Newly Generated Surfaces of Passive Metals

Theodore R. Beck*

F49620-76-C-0029

Introduction

Development of an understanding of stress corrosion cracking and corrosion fatigue requires a knowledge of the electrochemical behavior of the new metal surface generated at the crack tip. Newly generated metal surfaces have very different electrochemical properties from the steady state exterior surfaces of the metals which are covered by oxide films. Many of the metals subject to stress corrosion cracking and corrosion fatigue are normally passive, *e.g.*, stainless steels, aluminum, titanium, and zirconium.

Electrochemical conditions at a crack tip are not amenable to direct measurement because of a number of factors:

1. A long, tortuous electrolyte path in the crack has a high resistance.
2. The crack tip region is too small (< microns in radius) to introduce a Luggin capillary sufficiently close to the tip.
3. Reactions occur on the crack walls downstream from the tip and cause concentration and potential changes that obscure conditions at the tip.

Measurements of electrochemical parameters important to understanding events at a crack tip have therefore been made on new surfaces produced by other methods. Recent papers on the electrochemistry of new surfaces have been directed toward obtaining data to elucidate stress corrosion cracking, whereas earlier papers in general had other goals.

Techniques to obtain new metal surfaces may be divided into five categories: (1) Form droplets of liquid metal, (2) scrape or abrade a surface, (3) strain a wire, (4) rapidly shear a wire, and (5) rapidly fracture a notched specimen.

Reactions and events that occur on new surfaces are:

- Charge of the electrical double layer
- Dissolution

$$M \rightarrow M^{z+} + ze$$

- Formation of salt film and/or oxide film

$$M + zX^- \rightarrow MX_z + ze$$

and/or

$$M + z/_2 H_2O \rightarrow MO_{z/_2} + zH^+ + ze$$

- Hydrogen ion discharge

$$H^+ + e \rightarrow H \text{ (goes into metal or into } H_2 \text{ bubbles).}$$

All of these reactions have been studied by the techniques stated above.

The purpose of this paper is to review new surface experiments reported in the literature and examine advantages and limitations of the various techniques.

First, experiments with liquid mercury and scraping experiments to determine potentials of zero charge will be reviewed. Next, because of their historical significance, potential-step experiments using shielded electrodes will be described. Then the scrape and abrade, wire straining, and rapid shear and fracture will each be followed historically. Last, the various techniques will be compared on a qualitative basis.

Potential of Zero Charge

The earliest reported technique found for generation of new surface is the dropping mercury electrode. Mercury is a rather noble metal with a high hydrogen overpotential, so it has a wide range of potential in which it does not react with water. Paschen[1,2] took advantage of these properties to measure the potential of zero charge (pzc) of mercury; this is the potential at which there is a zero charge on the metal side of the interface.

The basic idea of the technique is that for a metal body with a given amount of charge, Q, at an interface, the charge density, q = Q/A, can be made arbitrarily small by sufficiently enlarging the interfacial area, A. The experiment is carried out in the apparatus illustrated in Figure 1. A fine jet of mercury flows into a solution in which it breaks up into fine droplets with large area. The potential, measured with a potentiometer or electrometer, rapidly approaches the pzc.

Andersen, Eyring, and coworkers[3-7] extended the concept to noble solid metals by means of a scraping technique. Noble metal wires embedded in Teflon were scraped on their ends with a high speed sapphire cutter in various electrolyte solutions, as shown in Figure 2. The cutting chips enlarged the metal surface analogously to the mercury drops in the Paschen experiment. Values of pzc were determined for silver, gold, bismuth, carbon, gallium, indium, iridium, platinum, rhodium, antimony, and tin by this technique.

The scraping method can fail to determine the pzc for several reasons as shown in the Pourbaix diagram of Figure

*Electrochemical Technology Corporation, Seattle, Washington.

392 075

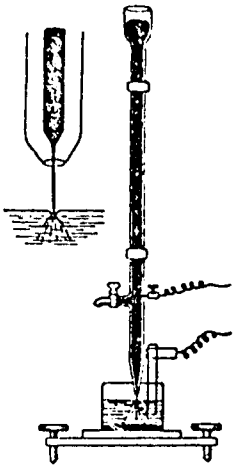

FIGURE 1 — Determination of potential of zero charge for mercury.[1]

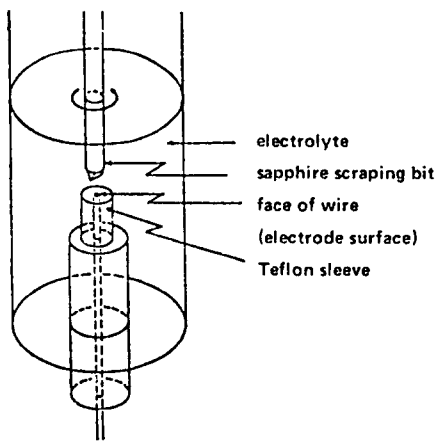

FIGURE 2 — Determination of potential of zero charge for solid metals by scraping method[7] (by permission of The American Chemical Society).

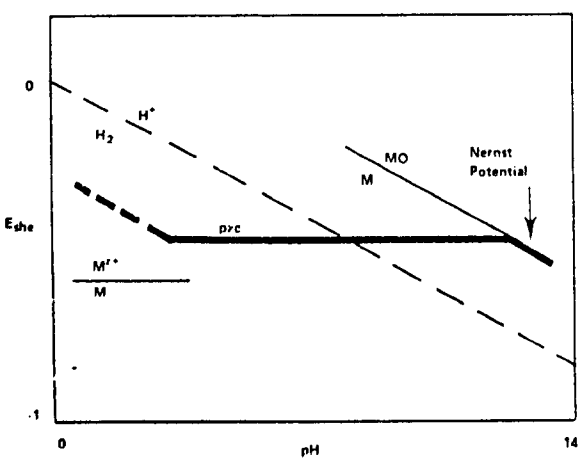

FIGURE 3 — Causes of errors in potential of zero charge.

3. At high pH, the pzc may intersect the reversible potential line for oxide formation. In this case, a Nernst potential is measured, as is the case for indium, gallium, bismuth, antimony, and tin. At low pH, the pzc may be sufficiently below the potential for hydrogen ion reduction that a mixed potential between the pzc and hydrogen ion reduction is obtained, as for gold, silver, the platinum metals, bismuth, and tin. If the pzc is above the reversible potential for metal dissolution, the scraping method will measure a Nernst potential or a mixed potential for dissolution and hydrogen ion reduction. This is the case for the more active metals of interest in stress corrosion cracking. The factors controlling scrape potential as a function of pH for various metals are summarized in Figure 4.

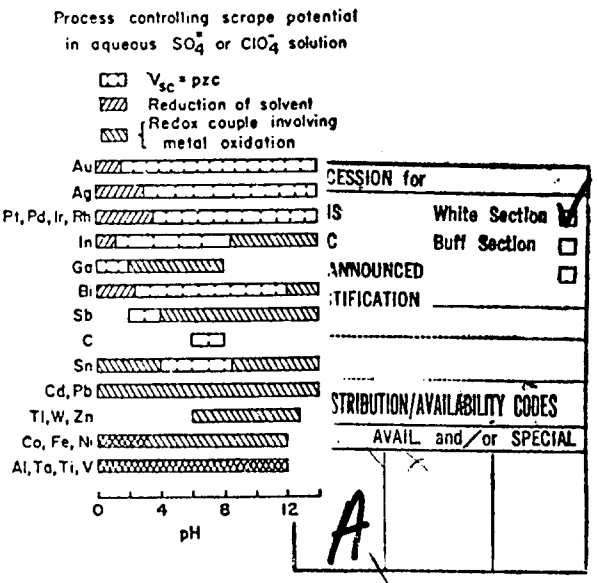

CESSION for
IS White Section
C Buff Section
ANNOUNCED
TIFICATION
STRIBUTION/AVAILABILITY CODES
AVAIL. and/or SPECIAL
A

FIGURE 4 — Factors controlling scrape potential as a function of pH[7] (by permission of The American Chemical Society).

Shielded Electrode, Step Potential

Muller[8] conducted a classic set of experiments in the 1920-30 era in which he applied a potential step to a shielded electrode initially at a rest potential and observed the resulting current transients and appearance of surface films formed. The shielded electrode, shown in Figure 5, has the virtues of a well defined active area, near-uniform current density over the metal surface, absence of convection, well defined mass transport conditions, and ease of observation. With this electrode, Muller showed that passivation process for iron involved first a precipitation of a ferrous salt followed by oxide.

Unfortunately, the technique is not generally applicable to many metals that stress corrode because a partial passivation exists even in their active corrosion regions of potential in strong acid solutions, *e.g.*, titanium.[9] This method of step potential from an immune state to an insoluble salt or oxide film forming state has been studied for a number of metals such as silver, lead, and mercury. Mechanisms of nucleation and growth of films have been derived based on such measurements.[10] A review of various anodic film processes has been made by Vermilyea.[11]

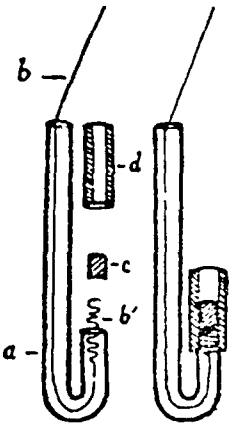

FIGURE 5 — Shielded electrode of W. J. Muller.[8] (a) glass tube, (b) connecting wire, (b') spiral wire spring, (c) metal cylinder, (d) rubber tube (by permission of the Faraday Society).

Scrape and Abrasion

The first paper found that was concerned with measurements of electrochemical current or potential of a newly generated surface was by Brown and Mears[12] in 1938. They wax-coated specimens of aluminum and made 1 cm long scratches through the wax in neutral, 100 gm/l, KCl and NaCl solutions. Current flowing to a second, bare specimen of aluminum was measured with a microammeter. Potentials of each electrode were measured. The scratched electrode became negative to the other electrode and an anodic current flowed to it. The purpose of these experiments was to demonstrate the electrochemical nature of corrosion for aluminum. The potential of the scratched aluminum went 0.4 to 0.5 V negative to the standard hydrogen electrode.(1) As will be seen later in work of other investigators, a new surface of aluminum goes to a more negative potential, but high speed measurements are required to measure it.

Clark and Akimov[13] in 1941 reported on abrasion of metal surfaces to determine effect on steady state electrode potential. This was followed by a number of Russian papers.[14-16] Schwabe and Dietz[17] abraded nickel with a corundum wheel in various electrolyte solutions and studied passivation. The behavior of nickel was interpreted as due to formation of chemisorbed oxygen.

Schwabe[18] in 1960 described a continuous scraping experiment illustrated in Figure 6. He scraped nickel and iron in various strong acid solutions and concluded that a primary salt layer did indeed form prior to oxide passivation.

Breiter[19] in 1967 scraped a rotating cadmium rod with a sapphire cutter in potassium hydroxide solutions in a cell illustrated in Figure 7. By measuring cyclic voltammograms at different rpm and voltage sweep speeds, he found that scraping led to considerable increase in current density over a resting electrode.

Tomashov and Vershinini[20] in 1970 described abrasion experiments on iron, nickel, tin, palladium, lead, zinc,

(1) All electrode potentials will be referred to the standard hydrogen scale.

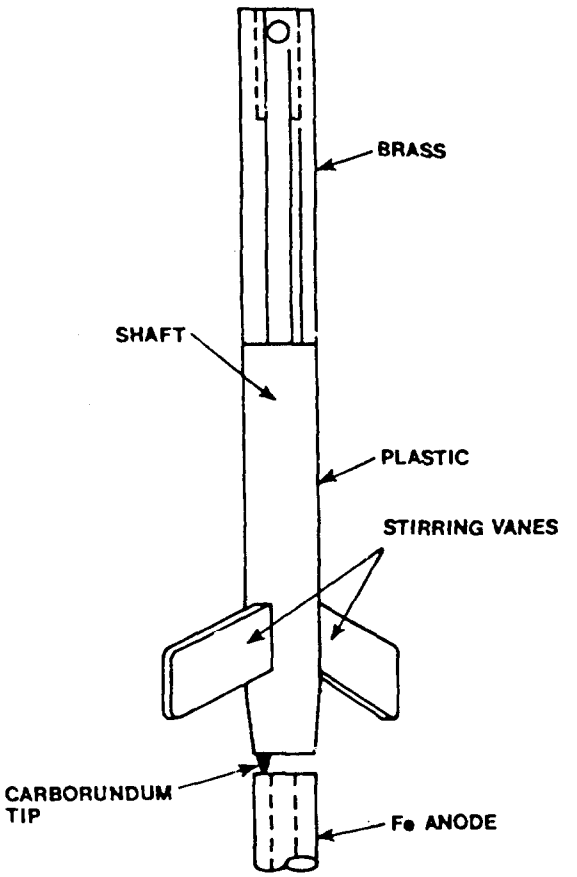

FIGURE 6 — Scraped anode[18] (by permission of Z. Phys. Chem.).

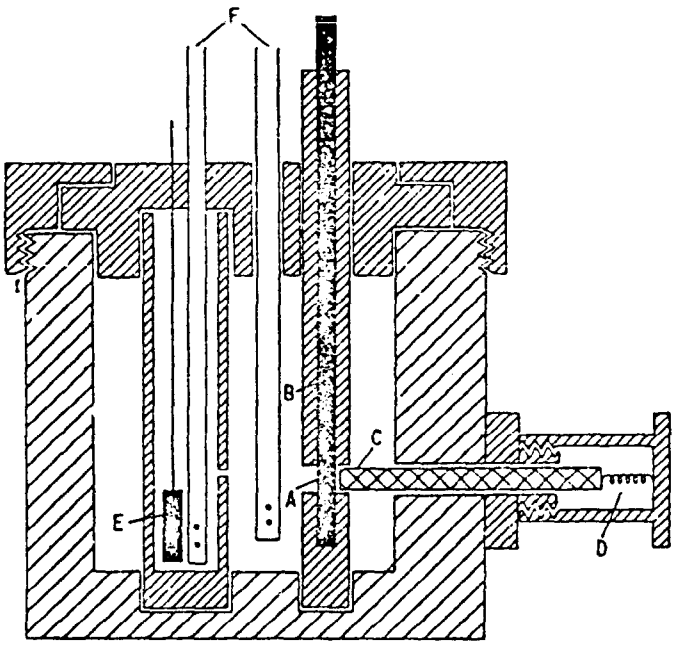

A—cadmium rod
B—steel rod
C—sapphire rod
D—steel spring
E—platinized Pt foil attached to Pt wire
F—Teflon tubing with closed ends and small holes for gas stirring
▩ —made of Teflon

FIGURE 7 — Scraped cadmium anode[19] (by permission of Pergamon Press).

titanium, and chromium. The apparatus they used, illustrated in Figure 8, was similar to that of Schwabe except that their Luggin capillary came through the metal specimen from the back side to the abraded surface. They studied both hydrogen evolution and anodic polarization in various inorganic electrolytes. Anodic polarizations of lead and zinc during anodic dissolution were found to be unaffected by abrasion, whereas iron, nickel, titanium, and chromium polarizations were sharply reduced. Titanium, nickel, and chromium were not completely active, even at the highest abrasion rates of 2000 rpm.

Ambrose and Kruger[21] in 1972 described a technique they termed tribo-ellipsometry. With it, a metal specimen is polished with an abrasive wheel to remove surface oxides as shown in Figure 9. The wheel is rapidly retracted, and the specimen is viewed with an ellipsometer. Repassivation current and film thickness by ellipsometry were simultaneously measured for low carbon steel in nitrate, nitrite, and buffered borate solution. Ellipsometric measurements could be started within about 10 milliseconds of cessation of abrasion. A considerable portion of the oxide film growth occurred prior to the ellipsometer measurements. Ambrose and Kruger later reported[22] on tribo-ellipsometric measurements on Ti:8%Al-1%Mo-1%V alloy in 1N NaCl and 1N $NaNO_3$.

Beck[23] in 1972 reported on scraping titanium with a sapphire bit in small volumes of hydrochloric acid solutions. The technique was similar to that of Schwabe[18] (Figure 7), except that the metal specimen was rotated and advanced axially against a fixed sapphire bit. The solution turned purple from dissolved Ti^{3+} which was measured quantitatively by the H_2O_2 spectrophotometric method. It was found that a large fraction of the anodic current passed could be accounted for by dissolution. The current increased with the depth of cut per revolution, and it appeared that at least a μm/revolution had to be removed to make the surface fully active.

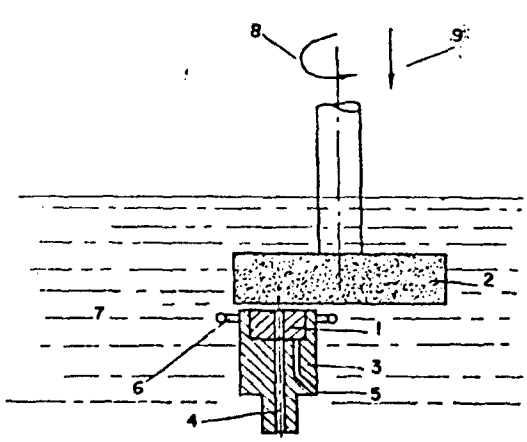

FIGURE 8 – Continuously abraded electrode[20] (by permission of Pergamon Press). 1–Sample, diameter 10 mm; 2–corundum scouring disk; 3–insulating sheath of sample (plastics); 4–capillary for measuring potential; 5–contact to sample; 6–counter electrode (Pt); 7–solution; 8–controlled rotation of corundum disk; 9–continuous application of corundum disk to sample.

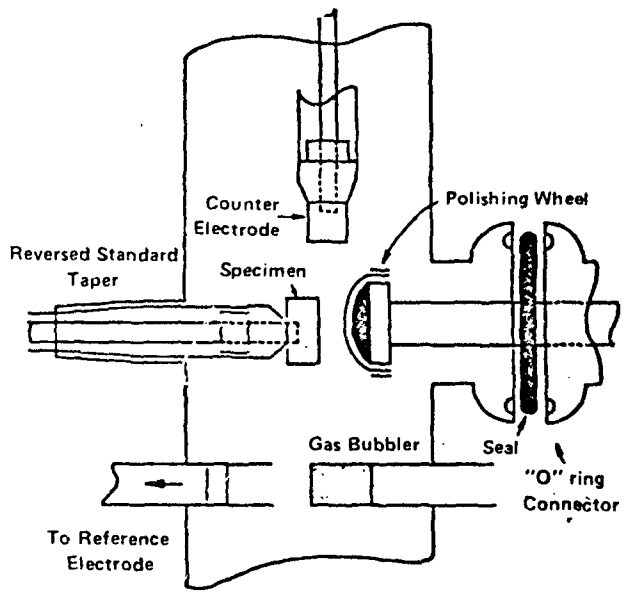

FIGURE 9 – Tribo-ellipsometric electrochemical cell with retracting abrasion wheel[21] (by permission of NACE).

Stretch of Wires

A number of investigators have studied effects of stress and strain on metal wires. Fryxell and Nachtrieb[24] in 1952 reviewed some of the earlier work and presented data for silver and gold. Their apparatus, illustrated in Figure 10, is typical for the method. They conclude that the small, stress induced changes in electrode potential could not be explained by thermodynamic considerations of stress, but were due to disruption of a film at the metal-solution interface.

Funk, Giddings, Christensen, and Eyring[25] in 1957 reported changes in potential of copper wires associated with strain, and the decay time of the potential transient. Potential excursions of up to 200 mV in the negative direction with strain, depending upon the solution, were measured. The time constant for decay was on the order of one second. Results were interpreted as due to rupture of a copper oxide film. At low pH, the potential excursions were less due to thinner oxide film.

Hoar and West[26] described in a note in 1958 and later in more detail[27] the anodic dissolution of straining austenitic stainless steel wires in boiling concentrated magnesium chloride solutions. Yielding at quite small strain rates was shown to considerably decrease activation polarization. These results were confirmed by Hoar and Scully.[28] Hoar and Galvele[29] measured current increase for mild steel polarized in nitrate solutions.

A number of papers have appeared which were concerned with effects of straining on electrode potential and kinetics for metals not normally passive.[30–33] These works are of less concern here because the present interest is in reactivity of normally passive metals.

Bubar and Vermilyea[34] presented a most interesting paper in 1966 on deformation and cracking of anodic oxide films on straining wires lending a note of caution in interpreting straining experiments. They derived an equation for new surface formed by cracking of the oxide film

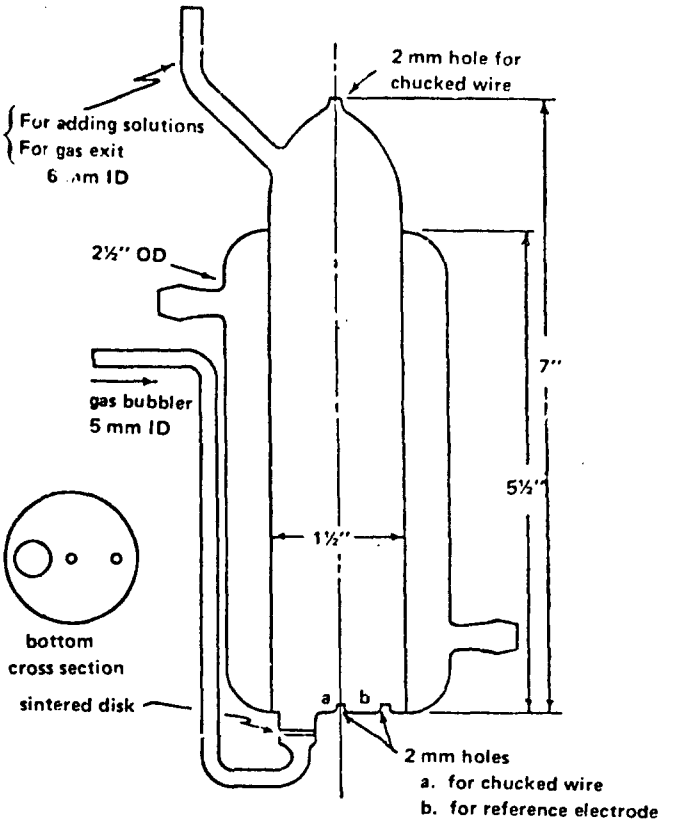

FIGURE 10 – Straining wire cell[24] (by permission of The Electrochemical Society, Inc.).

assuming constant volumes for the metal and film, that cracks occur when the original length is exceeded, and that the film maintains contact with the metal while the diameter is reduced by elongation. They noted that this last assumption requires some deformation of the film. Aluminum oxide films appeared to be completely brittle, giving agreement with the equation for thin films. Thick alumina films showed evidence of spalling and producing greater than theoretical bare surface. Tantalum oxide films exhibited great ductility and thinned rather than cracked.

Shibata and Staehle[35] in 1972 reported on use of the wire straining technique to measure transient currents for iron, nickel, and Fe-Cr-Ni alloys. Murata and Staehle[36] assumed that ideal fracture of passive oxides produced a multiplicity of new surfaces at slip steps, and interpreted their data on the basis of integrating the current from these individual slip steps.

Diegle and Vermilyea[37] in 1975 presented a method of applying a rapid-pulse strain to a wire specimen by dropping a weight on an attached movable shaft. A 5% strain in one millisecond was achieved. They assumed ideal fracture behavior for the surface oxide on iron in concentrated sodium hydroxide solutions. Dissolution appeared to occur simultaneously with passivation.

Rapid Shear and Fracture of Metal

Hagyard and Williams[38] in 1961 described an interesting method for rapidly generating a known new surface area of aluminum in aqueous $KCl\text{-}AlCl_3$ electrolytes. Electrode potential was measured as a function of time on an

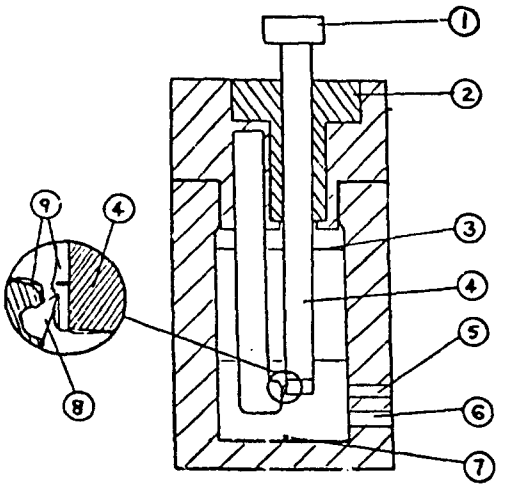

FIGURE 11 – Rapid-shear cell[39] (by permission of The Electrochemical Society, Inc.). 1–Anvil; 2–Duralium bush, 3–PTFE anti-splash guard; 4–electrode; 5–salt bridge (cellophane membrane); 6–hydrogen inlet; 7–platinum wire electrode; 8–ruby cutter; 9–polyethylene coating.

oscilloscope. An illustration of the apparatus is shown in Figure 11. An aluminum rod of 99.99% purity (4 in Figure 11) was coated on its lower end with fused polyethylene. A ruby cutter (8 in Figure 11) driven downward by a hammer blow on the top (1 in Figure 11) of its supporting rod cut a neat gash through the polyethylene into the underlying aluminum. The cutting time was about 10^{-4} sec. A cavitation bubble was observed to follow the cutter. At its collapse, the rise time of the potential was about 6 μsec. The initial potential peaked at about -1.6 volts on the hydrogen scale, close to reversible potential for aluminum. In a later paper by Hagyard and Earl,[39] an anodic polarization curve for the fresh aluminum surface was obtained at a time of 10-30 μsec after cutting. They also obtained a cathodic polarization curve at a time of 1 m sec. Hagyard and Chapman[40] showed that for cadmium in chloride solution, there was reasonable agreement between the potential obtained by the rapid shear method and conventional static methods.

Beck[41,42] presented a method of fast fracture to obtain new surfaces of titanium. Whereas fast shear works well for a ductile metal like high purity aluminum, fast fracture is applicable for harder, more brittle, metals. A diagram of the fast fracture cell is given in Figure 12. A double notched specimen is broken by dropping lead weights onto a rod connected through a lever arm to the specimen. The specimen is potentiostated and the current is determined as a function of time after fracture by recording on a storage oscilloscope or storing and processing in a minicomputer. Most of the experiments were conducted in strong acid solutions. The measured initial anodic current density can be high (> 10 A/cm^2) and is limited by the ohmic drop between the Luggin capillary and the new surface. A mixed potential is immediately established between anodic dissolution and hydrogen ion discharge, and the actual initial current densities may be as high as 10^1 to 10^3 A/cm^2, but new techniques need to be developed in order to determine how high. The current

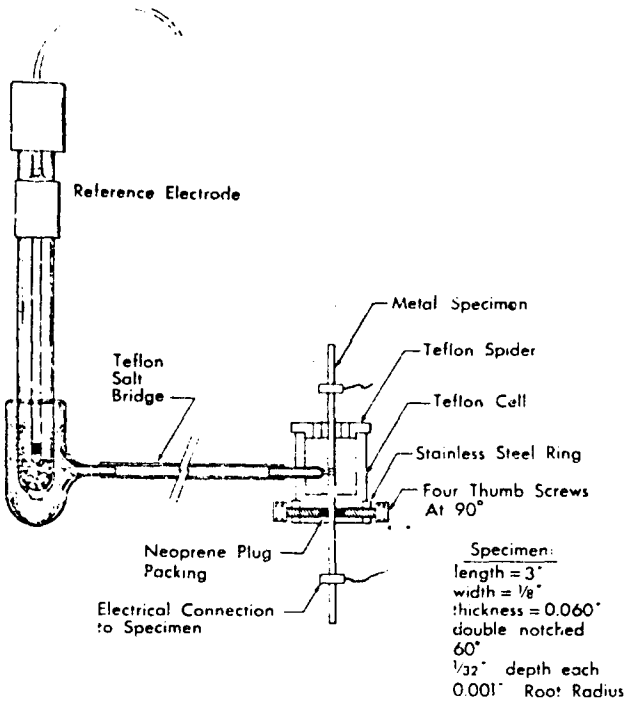

FIGURE 12 – Rapid-fracture cell[41] (by permission of The Electrochemical Society, Inc.)

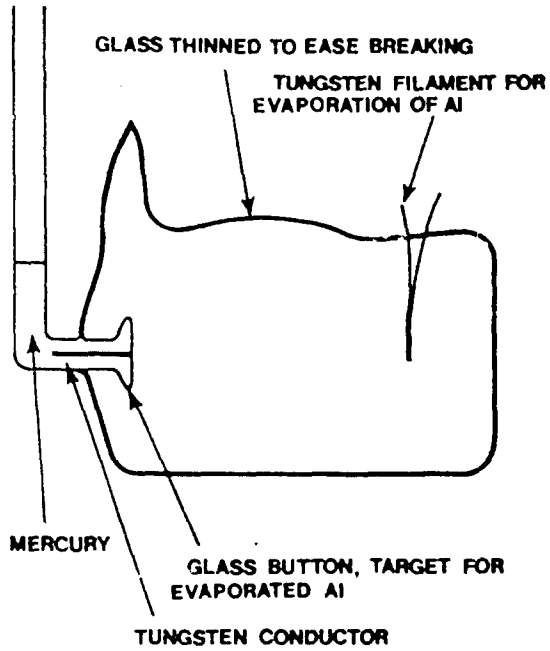

FIGURE 14 – Breakable glass bulb with vacuum deposited aluminum[46] (by permission of The Electrochemical Society, Inc.).

starts to decay at about a m sec after the fast rise. It is likely that a cavitation bubble forms as for the fast shear method. After an initial current decay at about a -2 power, the decay follows a -1 power law, which may be attributed to high field growth of oxide. After about 10^3 sec from fracture, a steady state passive current density is approached.

Buhl[4.3–4.5] described a shear method for titanium illustrated in Figure 13. Results were similar to the rapid fracture tests except that the shear rate was slow (1.2 sec) so that a distribution of age existed on the surface. Further, the sheared slip of metal continued to contribute anodic current until it broke off. Machining chips likely contribute to anodic current in all of the continuous abrasion and scraping methods.

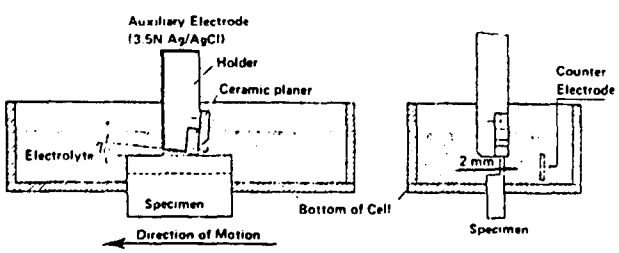

FIGURE 13 – Sheared specimen cell[43] (by permission of NACE).

Electrolyte Contact with Vacuum Deposited Metal

Hagyard, *et al*[46] vapor deposited 99.99% aluminum on a glass button in an evacuated thin wall glass bulb illustrated in Figure 14. The initial peak potential measured upon breaking the bulb under 1N KCl solution was -1.67 volts. There was thus good agreement with the rapid shear method.

Comparison of the Various Methods to Produce New Surfaces of Passivating Metals

It is desirable to compare the advantages and disadvantages of the various methods of producing new metal surfaces for electrochemical study. None of the methods is perfect, and trades must be made.

Table 1 lists the various methods of creating a new active surface and some criteria for judging them. A qualitative comparison is made on the basis of good–G, fair–F, and poor–P. The ranking of criteria are somewhat subjective; they will be explained.

The shielded electrode method does not generate new surface, but it is capable of generating active surfaces of certain metals and is thus a basis for comparison. It ranks high on all criteria except that most of the passive metals of interest are partially passivated even in their active corrosion region of potential. Iron in acid solutions is an exception and could be used for cross checking the other methods.

Definition of new area and initial passive condition of the surface go together. The shielded electrode has a well defined surface area, but many of the metals subject to stress corrosion cracking are partially passivated in their active region of potential. The fast fracture and fast shear methods both generate well defined virgin surfaces. Stretch of wires generates virgin surface, but the exact amount of new area is open to question due to plasticity or brittleness of the preexisting surface oxide. Continuous scrape does not generate a well defined new area unless the depth of cut per pass exceeds a critical value because the tool may skip

TABLE 1 – Qualitative Comparison of Methods to Measure Kinetic Parameters for Bare Metal Surfaces

G = Good, F = Fair, P = Poor

Method \ Criterion	Well Defined New Area	Initial Active Condition of Surface	Mechanical Disturbance of Surface	Current to Chips	Time for Solution to Reach Surface	Current Density Distribution	Solution Ohmic Drop	Charge EDL on Adjacent Surface	Optical Observation	Analysis of Solution for Dissolution Products
Shielded electrode	G	G-P	G	G	G	G	G-F	G	G	G
Fast fracture	G	G	F	G	F	F	F	G	P	P
Fast shear	G	G	F	F	F	F	F	G	F	P
Strain wire	G-P	G	F	G	G	F	G-P	G-F	P	P
Continuous scrape	G-P	G-P	F	F	F	F	F	C-F	F	G
Continuous abrade	G	G-P	F	F	G	F	F-P	G	P	G
Abrade with retraction	G	G-P	F	G	F	F	G-F	G	G	P
Electrolyte contact with vacuum deposited metal	G	G-P	G	G	F	F	F	G	G	P

over the oxide surface. The initial passive condition is therefore also open to question. Abrasion, both continuous and with retraction, is subject to the same question.

All of the mechanical methods that produce new surface cause some mechanical damage to the surface, *e.g.*, plastic flow, stress, and surface roughness. The increase in free energy due to stress in plastic flow is on the order of a few millivolts. With high anodic overvoltage applied to passivating metals, the effects of residual stress should be negligible. Surface roughness, about a factor of two, may be developed on rapid fracture. Current flowing to cutting chips can cause an error in current density in the fast shear and continuous scrape and abrade methods.

Formation of cavitation bubbles can cause a delay in solution reaching the surface in the fast fracture and shear, continuous scrape, and abrade with retraction methods. The collapse time of the cavitation bubble has been estimated at 5×10^{-5} sec for the fast fracture method.[42] Some reaction may accompany metal contact with the vapor bubble. A water vapor pressure of 20 Torr and 5×10^{-6} gives 10^{-4} Torr sec, whereas formation of a monolayer requires only about 10^{-6} Torr sec with unit sticking coefficient. Formation of cavitation bubbles would not be expected for wire stretching because the displacements are on a micro scale. Likewise continuous abrasion should be free of cavitation.

Among the methods in Table 1, only the shielded electrode has the capability of providing a uniform current density over the new surface. All of the other methods have some degree of shielding or edge effects. Solution of the Laplace equation for conduction in the electrolyte gives infinite primary current density at the edge of an electrode with an unbounded electrolyte.[47] Polarization, of course, limits the edge current density to a finite value, but nevertheless, nonuniform current density could affect kinetic interpretations.

Solution ohmic drop is more or less of a problem for all of the methods for the very active-passive metals because quite large current densities can occur. For the stationary, shielded electrode, a Luggin capillary can be placed in the cavity[48] to minimize the ohmic drop. The mechanical methods have limitations on how close the Luggin capillary can be placed unless it can be brought in from the back side in the abrasion techniques.[20] Small slip steps produced in the wire stretching method can have small ohmic drops in solution even at high local current densities because of hemispherical or hemicylindrical conduction in the electrolyte. Advantage was taken of this concept to obtain high current densities with the fast fracture of small notched titanium wires.[49]

Charging of the electrical double layer on adjacent passive surface can cause errors in peak current and potential measurements when the fraction of new surface is small. For example, titanium has a semiconducting surface oxide and the electrical double layer capacity is about 20 $\mu F/cm^2$. If a patch of bare metal is formed by fracture of the oxide, the potential of this new surface may be a volt negative to the rest potential of the oxide covered surface, requiring 20 $\mu C/cm^2$ to change the potential of the oxide surface. The charge to passivate a unit area of new surface may be about 10 mC/cm^2.[42] Ten percent new surface must therefore be produced to reduce the EDL charging error to 2%.

Optical observation of the new area is only possible for those methods where a sufficiently large new surface that is planar and is in a fixed position is produced. These conditions only obtain on the shielded electrode, abrasion with retraction, and a vacuum deposited metal surface.

Analysis of the solution for anodic dissolution products produced transiently is only applicable for the methods in which the metal surface can be continually renewed in a small volume of electrolyte, *i.e.*, the continuous scrape and

abrade methods. The shielded electrode method could be used for those metals that passivate slowly (*e.g.*, Fe) by repeated passivations.

Conclusions

Valuable information for interpretation of stress corrosion cracking can be obtained from the methods of producing new metal surfaces. Continued work with increased rigor in technique and analysis appears to be warranted. In particular, it would be desirable to test results of the various methods against each other for a given metal for consistency of results.

Acknowledgment

Support of this work by Air Force Office of Scientific Research Contract No. ~~F44620-76-C-001~~ is gratefully acknowledged. F49620-76-C-0009

References

1. F. Paschen. Ann. Physik, Vol. 43, p. 568 (1891).
2. H. R. Kruyt, Ed. Colloid Science, review chapter by J. Th. G. Overbeek, p. 151, Vol. I, Elsevier, New York (1952).
3. T. N. Andersen, R. S. Perkins, and H. Eyring. J. Am. Chem. Soc., Vol. 86, p. 4496 (1964).
4. R. S. Perkins, R. L. Livingston, T. N. Andersen, and H. Eyring. J. Phys. Chem., Vol. 69, p. 3329 (1965).
5. D. D. Bode, Jr., T. N. Andersen, and H. Eyring. J. Phys. Chem., Vol. 71, p. 792 (1967).
6. D. D. Bode, Jr., T. N. Andersen, and H. Eyring. J. Electrochem. Soc., Vol. 114, p. 72 (1967).
7. T. N. Andersen, J. L. Anderson, and H. Eyring. J. Phys. Chem., Vol. 73, p. 3552 (1969).
8. W. J. Muller. Die Bedeckungtheorie der Passivitat der Metalle, Verlag Chemie, Berlin, 1933; also Trans. Faraday Soc., Vol. 27, p. 737 (1931).
9. T. R. Beck. Corrosion, Vol. 30, p. 408 (1974).
10. M. Fleischmann and H. R. Thirsk. Metal Films and Electrocrystallization, Advances in Electrochemistry and Electrochemical Engineering, Vol. 3, p. 123, P. Delahay and C. W. Tobias, Eds., John Wiley, New York (1963).
11. D. A. Vermilyea. Anodic Films, in Advances in Electrochemistry and Electrochemical Engineering, Vol. 3, p. 211, P. Delahay and C. W. Tobias, Eds., John Wiley, New York (1963).
12. R. H. Brown and R. B. Mears. Trans. Electrochem. Soc., Vol. 74, p. 495 (1938).
13. G. B. Clark and G. V. Akimov Dokl. Akad. Nauk SSSR, Vol. 30, p. 9 (1941).
14. N. D. Tomashov and R. M. Altovsky. Corrosion of Metals and Alloys, Russ. M. (1963).
15. N. D. Tomashov, G. P. Chernova, R. M. Altovsky, and G. K. Blynchevsky. Zav. Lab., Vol. 24, p. 229 (1956).
16. B. N. Kabanov and E. V. Barelko. Zh. Fiz. Khim., Vol. 31, p. 11 (1956).
17. K. Schwabe and G. Dietz. Z. Elektrochem., Vol. 62, p. 751 (1958).
18. K. Schwabe. Z. Phys. Chem., Vol. 214, p. 343 (1960).
19. M. W. Breiter. Electrochimica Acta, Vol. 12, p. 679 (1967).
20. N. D. Tomashov and L. P. Vershinina. Electrochimica Acta, Vol. 15, p. 501 (1970).
21. J. R. Ambrose and J. Kruger. Corrosion, Vol. 28, p. 30 (1972).
22. J. R. Ambrose and J. Kruger. J. Electrochem. Soc., Vol. 121, p. 599 (1974).
23. T. R. Beck. Electrochimica Acta, Vol. 18, p. 807 (1973).
24. R. E. Fryxell and N. H. Nachtrieb. J. Electrochem. Soc., Vol. 99, p. 495 (1952).
25. A. G. Funk, J. C. Giddings, C. J. Christensen, and H. Eyring. I. Proc. Natl. Acad. Sci., Vol. 43, p. 421 (1957); II. J. Phys. Chem., Vol. 61, p. 1179 (1957).
26. T. P. Hoar and J. M. West. Nature, Vol. 181, p. 835 (1958).
27. T. P. Hoar and J. M. West. Proc. Roy. Soc., Vol. A 268, p. 304 (1962).
28. T. P. Hoar and J. C. Scully. J. Electrochem. Soc., Vol. 111, p. 348 (1964).
29. T. P. Hoar and J. R. Galvele. Corrosion Sci., Vol. 10, p. 211 (1970).
30. A. Windfeldt. Electrochimica Acta, Vol. 9, p. 1139 (1964); ibid., Vol. 9, p. 1295 (1964).
31. E. M. Gutman. Soviet Materials Sci., Vol. 3, p. 264 (1967); ibid., Vol. 3, p. 404 (1967).
32. A. R. Despic, R. G. Raicheff, and J. O'M. Bockris. J. Chem. Phys., Vol. 49, p. 926 (1968).
33. M. A. V. Devenathan and M. J. Fernando. Electrochimica Acta, Vol. 15, p. 1623 (1970).
34. S. F. Bubar and D. A. Vermilyea. J. Electrochem. Soc., Vol. 113, p. 892 (1966).
35. T. Shibata and R. W. Staehle. Proc. 5th International Congress on Metallic Corrosion, 1972, p. 487, NACE, Houston, Texas (1974).
36. T. Murata and R. W. Staehle. Proc. 5th International Congress on Metallic Corrosion, 1972, p. 513, NACE, Houston, Texas (1974).
37. R. B. Diegle and D. A. Vermilyea. J. Electrochem. Soc., Vol. 122, p. 180 (1975).
38. T. Hagyard and J. R. Williams. Trans. Faraday Soc., Vol. 57, p. 2288 (1961).
39. T. Hagyard and W. B. Earl. J. Electrochem. Soc., Vol. 114, p. 694 (1967).
40. T. Hagyard and K. M. Chapman. J. Electrochem. Soc., Vol. 113, p. 961 (1966).
41. T. R. Beck. J. Electrochem. Soc., Vol. 115, p. 890 (1968).
42. T. R. Beck. Electrochimica Acta, Vol. 18, p. 815 (1973).
43. H. Buhl. Proc. 5th International Congress on Metallic Corrosion, 1972, p. 302, NACE, Houston, Texas (1974).
44. H. Buhl. Corrosion Science, Vol. 13, p. 639 (1973).
45. H. J. Ratzer-Scheibe and H. Buhl. Werkstoffe und Korrosion, Vol. 26, p. 1 (1975).
46. T. Hagyard, W. B. Earl, K. J. Kirkpatrick, and I. G. Watson. J. Electrochem. Soc., Vol. 113, p. 962 (1966).
47. J. S. Newman. Electrochemical Systems, p. 340, Prentice-Hall, Englewood Cliffs, New Jersey (1973).
48. T. R. Beck. J. Electrochem. Soc., Vol. 120, p. 1317 (1973).
49. T. R. Beck. NACE Research Conference, Chicago, 1974 (to be published).

UNCLASSIFIED

SECURITY CLASSIFICATION OF THIS PAGE (When Data Entered)

APR 4 REC'D

REPORT DOCUMENTATION PAGE

READ INSTRUCTIONS BEFORE COMPLETING FORM

1. REPORT NUMBER: AFOSR-TR- 78 - 0629

2. GOVT ACCESSION NO.

3. RECIPIENT'S CATALOG NUMBER

4. TITLE (and Subtitle): TECHNIQUES FOR STUDYING INITIAL FILM FORMATION ON NEWLY GENERATED SURFACES OF PASSIVE METALS

5. TYPE OF REPORT & PERIOD COVERED: Interim

6. PERFORMING ORG. REPORT NUMBER

7. AUTHOR(s): Theodore R. Beck

8. CONTRACT OR GRANT NUMBER(s): F49620-76-C-0029

9. PERFORMING ORGANIZATION NAME AND ADDRESS:
Electrochemical Technology Corp.
3935 Leary Way N.W.
Seattle, WA 98107

10. PROGRAM ELEMENT, PROJECT, TASK AREA & WORK UNIT NUMBERS: 2303/A2, 61102F

11. CONTROLLING OFFICE NAME AND ADDRESS:
Air Force Office of Scientific Research (NC)
Bolling AFB, Bldg. 410
Washington, DC 20332

12. REPORT DATE: March, 1977

13. NUMBER OF PAGES: 8

14. MONITORING AGENCY NAME & ADDRESS (if different from Controlling Office)

15. SECURITY CLASS. (of this report): Unclassified

15a. DECLASSIFICATION/DOWNGRADING SCHEDULE

16. DISTRIBUTION STATEMENT (of this Report)

DISTRIBUTION STATEMENT A
Approved for public release;
Distribution Unlimited

17. DISTRIBUTION STATEMENT (of the abstract entered in Block 20, if different from Report)

18. SUPPLEMENTARY NOTES

Electrochemical Techniques for Corrosion, National Association of Corrosion Engineers (NACE), Houston, TX, pp27-34, 1977

19. KEY WORDS (Continue on reverse side if necessary and identify by block number)

electrochemistry, metals, corrosion, passivation

20. ABSTRACT (Continue on reverse side if necessary and identify by block number)

Development of an understanding of stress corrosion cracking and corrosion fatigue requires a knowledge of the electrochemical behavior of the new metal surface generated at the crack tip. Newly generated metal surfaces have very different electrochemical properties from the steady state exterior surfaces of the metals which are covered by oxide films. The purpose of this paper is to review new surface experiments reported in the literature and examine advantages and limitations of the various techniques. (continued)

DD FORM 1 JAN 73 1473 EDITION OF 1 NOV 65 IS OBSOLETE

Unclassified

SECURITY CLASSIFICATION OF THIS PAGE (When Data Entered)

20. ABSTRACT (continued)

Techniques to obtain new metal surfaces may be divided into five categories: (1) Form droplets of liquid metal, (2) scrape or abrade a surface, (3) strain a wire, (4) rapidly shear a wire, and (5) rapidly fracture a notched specimen.